Belshaw

Donut Production Equipment

www.belshaw.com

Operator's Manual
Technical Supplement
Parts & Electrical Diagrams

Year of manufacture

2023

Models:

618L • 624 • 634

Donut Fryer • Electric Heated • Electronic Temperature Controller

Electronic Temperature Controller

ITEM NUMBER 21285

SERIAL NUMBER

Item Number and Serial Number are marked on a data tag attached to the equipment.
This manual should only be used with the Item Number(s) shown above.

SUPPORT

USA/Canada 1-800-BELSHAW
International (+1) 206-322-5474
Email service@belshaw.com
Web www.belshaw.com

618L | 624 | 634

Electric Fryer

Operator's Manual

Part # MN-0019EN 04-05-2023

Belshaw 814 44th Street NW, Suite 103, Auburn, WA 98001 USA
1-800-BELSHAW • 800-578-2547 (USA/Canada) • (+1) 206-322-5474 (International)
service@belshaw.com • www.belshaw.com

Doc: Belshaw-MN0019EN-618L-624-634-v03-040523

EQUIPMENT RECORD

Please provide the information below when you correspond with Belshaw about your machine.

Purchased by _____

Installed by _____

Date of Installation _____

Model number _____

Serial number _____

IN CASE OF DAMAGE TO EQUIPMENT

In case of damage to the equipment upon delivery, follow these steps immediately.

1. Inform the freight carrier. The phone number will be on the shipping receipt or label.
2. Take photographs of the equipment, both inside and outside the box or crate.
3. Do not throw away any packaging.
4. Report the damage to the distributor (or other party) from whom you bought the equipment.
5. Email your photos to the distributor (or other party) AND to Belshaw Customer Service at service@belshaw.com. Include a Belshaw Order Number in your communications. Your Order Number will begin with "CO…, followed by 6 digits) and should be marked on the box or crate.

IN CASE OF MISSING ITEMS

1. If possible, note the missing items on the delivery receipt of the freight carrier.
2. Take photographs of the entire shipment.
3. Follow steps 2 – 5 above.

Belshaw 814 44th Street NW, Suite 103, Auburn, WA 98001 USA

1-800-BELSHAW • 800-578-2547 (USA/Canada) • (+1) 206-322-5474 (International)

service@belshaw.com • www.belshaw.com

Contents

Operator's Manual 1

Before you start ***4***

1 Operation ***5***

2 Cleaning ***7***

Cleaning the Exterior Surfaces 7
Cleaning the Frying Screen 7
Cleaning the Kettle 7

3 Donut-Making Helps ***10***

Tips on Making Quality Cake Donuts 10
Calculating Correct Water Temperature 11
Ratios of Plunger Sizes to Donut Weights 11
Temperature Conversion 11

Technical Supplement > *Located after Operator's Manual*

- Printed separately for CE / European Union manuals

Before you start

The 618L, 624, and 634 Electric Fryers are designed to fry cake and yeast-raised donut products. Each must be bolted to a flat, dry floor. The operator should stand opposite the heater head.

The operator must work safely at all times and read this manual and follow its instructions and warnings. A thorough understanding of how to install, maintain, and safely operate the fryer will prevent production delays and injuries.

Heed the following warnings and all other warnings that appear in this manual:

- Make sure the machine is bolted securely to the floor. Doing so will prevent the machine from moving, tipping, or falling, which could cause serious injury.
- To avoid damaging the machine, never use force to assemble, disassemble, operate, clean, or maintain it.
- Never let water and hot shortening come in contact with each other. Moisture causes hot shortening to spatter, which may cause serious burns.
- Do not overfill the kettle with shortening. If shortening overflows the kettle, it could cause serious burns or could cause someone to slip on the floor and be seriously injured.
- Hot shortening can cause serious burns. Make sure that the system and the shortening are cool before attempting any cleaning, adjustment, disassembly, or repair.
- To avoid electrocution or other injury, unplug the machine before attempting any cleaning, adjustment, disassembly, or repair.
- Be careful never to get shortening, water, or other materials on the floor. If anything does get spilled on the floor, mop it up immediately. Materials on the floor can cause people to slip or fall, resulting in serious injury or loss of life.
- To prevent unintentional startup and possible fire, unplug the machine if there is a local power outage. When the power is restored, it is safe to plug the machine in again.
- To avoid risk of fire, do not install the unit closer than six (6) inches to a back wall and two (2) inches to the side walls.
- To avoid electrocution, make sure that all electrical cords are not frayed or cracked and that they do not pass through any water or shortening.
- For supply connections, use 10AWG wires suitable for at least 75 °C.
- Make sure that all electrical cords are routed so that no one will trip over them.

1 Operation

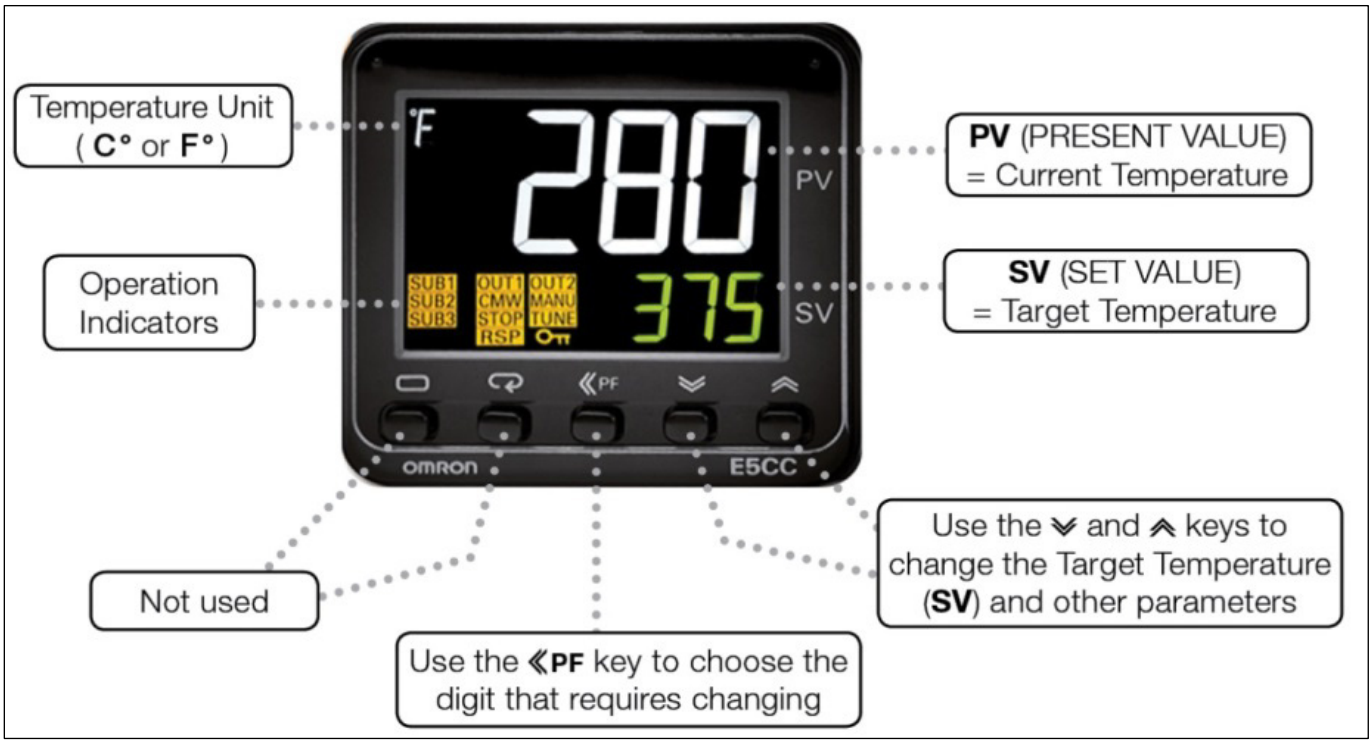

Above: OMRON Digital Temperature Controller

READ EACH STEP COMPLETELY BEFORE DOING WHAT IT TELLS YOU TO DO.

1. Make sure the drain is closed. The drain handle is at the side of the fryer (usually the left side).
2. Put enough shortening in the kettle to **completely cover the heating elements**, thermocouple, and high-temperature limit control probe. Use one of these 3 methods:
3. If you have a Belshaw EZMelt shortening melter-filter, warm the shortening and then transfer it to the kettle. (Refer to the EZMelt operator's manual).

WARNING
Hot shortening causes severe burns.

4. Melt shortening in a pan on the stove and pour it into the kettle.
5. Put solid shortening manually into the kettle. Pack it tightly around the heating elements, thermocouple, and high-temperature limit control probe.

WARNING
Cover the heating elements completely! If you put solid shortening, do not leave any air spaces. Any air can cause the shortening to overheat and catch on fire.

6. When the elements have been completely covered with shortening, move the on/off switch to the ON position.
7. The "Power On" pilot light on the front of the fryer will light up.

FOR THE NEXT STEPS, SEE THE DIAGRAM OF THE DIGITAL TEMPERATURE CONTROLLER ON THE PREVIOUS PAGE

To adjust the target temperature (marked **SV** on the controller), push the up and down arrows at the bottom right.

1. Set the Digital Temperature Controller target temperature to 250°F/121°C.
2. The "Heating" pilot light on the front of the fryer will light up, indicating that the shortening has not yet reached the selected temperature.
3. Continue adding shortening to the kettle until it reaches the proper depth for frying. Use one of the 3 methods below. For safety reasons, we recommend the first method, and discourage you from using any other method.
4. Use a Belshaw EZMelt to melt shortening and transfer it to the kettle. See the EZMelt manual.
5. Melt shortening in a pan on the stove and pour it into the kettle.
6. Very carefully, put solid shortening into the kettle.

WARNING
To avoid serious burns, be very careful not to splatter hot shortening when you add shortening to the kettle.

Shortening expands as it increases in temperature. Put shortening in the kettle gradually. Let the shortening in the kettle heat up before you add more.

7. After all of the shortening has melted, set the digital temperature controller to the desired frying temperature.
8. The "Heating" pilot light will go out if the high temperature limit control breaks the circuit.
9. Wait for the shortening to reach the desired temperature.

WARNING
To avoid serious burns, when the fryer is operating, do not use any part of the fryer that is in contact with hot shortening.

Note: The fryer will automatically shut off the elements if temperature is too high. To restart, <u>wait for the shortening to cool</u>, then push the red reset button inside the door.

10. If you are frying cake donuts, move the depositor into place over the fryer. Refer to the depositor manual for complete installation and operation instructions.

CAUTION
To avoid damaging the machine, do not operate the conveyor until all the shortening has melted.

11. Continue supplying shortening to the kettle as required. Keep the kettle filled up to the "Oil Level" marks on the side.
12. When you have finished using the fryer, move the on/off switch to the OFF position.

2 Cleaning

For your safety, observe the following warnings throughout the entire cleaning process.

WARNING
Thoroughly clean and dry the floor if shortening, water, or other materials are spilled. Materials spilled on the floor can cause serious injury or loss of life.

WARNING
To avoid electrocuting yourself or damaging the machine, never allow water, steam, shortening, cleaning solution, or any other liquid to enter the electrical box or the heater head.

WARNING
To avoid being burned in an explosion, never use any flammable materials for cleaning.

Cleaning the Exterior Surfaces

1. Clean the polished and painted surfaces of the fryer with a soft, damp cloth. Use a non-abrasive cleaner to remove any discoloration.
2. Polish these surfaces with a soft, dry cloth.

Cleaning the Frying Screen

1. In a sink or a dishwasher, wash the frying screen using warm water and mild detergent. Do not use an abrasive cleaner or scraper.
2. Rinse the frying screen in clear water.
3. Dry the frying screen thoroughly, using a soft cloth, before using it again.

WARNING
Dry the frying screen thoroughly. Moisture causes hot shortening to spatter, which may cause serious injury.

4. Check the frying screen to make sure no metal is flaking off of it. If the screen is flaking, replace it immediately, so you do not get metal particles in your product.

Cleaning the Kettle

There are four basic steps to cleaning the kettle: removing the shortening, washing, rinsing, and drying. You must perform all four steps and perform them in the order listed.

Removing the Shortening

WARNING
To avoid being burned or electrocuted, disconnect the fryer from the power source before cleaning it.

1. Disconnect the machine from the power source.
2. Let the shortening cool to 100°F/38°C.

3. Place a Belshaw Shortening Filter or a large metal container under the drain valve of the fryer.

WARNING

Do not use a plastic container. If the shortening is not cool enough, the container will melt, possibly causing you to be burned, and causing shortening to get on the floor.

4. Open the drain valve by turning the drain valve extension knob on the side of the fryer cabinet. Allow all the shortening to drain into the Shortening Filter or metal container.
5. If you are using a metal container, watch it to make sure the shortening does not overflow. If the container becomes full, close the drain valve, put another metal container under the drain valve, and open the drain valve again.

WARNING

Do not allow the shortening to overflow the containers. Shortening will get on the floor, and if the shortening is not cool enough, you may be burned.

WARNING

Thoroughly clean and dry the floor if shortening is spilled. Shortening on the floor can cause serious injury or loss of life.

6. If you have drained the shortening into a metal container and you wish to re-use the shortening, set the container of shortening aside. Place another suitable container under the drain valve.
7. Brush accumulated crumbs from the heating elements. Accumulated crumbs cause corrosion and poor heat recovery.
8. Tilt the heater head assembly out of the fryer and lock it in place.
9. Using a non-abrasive, non-metallic spatula, scrape the sediment and any remaining shortening through the drain valve.
10. Close the drain valve.

Washing

1. Carefully pour hot water into the kettle, up to the normal level of the shortening. Add trisodium phosphate (TSP) or another appropriate cleaner.
2. Scrub the inside of the kettle. Do not use any abrasive cleaners or scrapers.

WARNING

To avoid being burned, be very careful as you work with hot cleaning solution. Never put your hands in the solution. Wear gloves and long sleeves in case any solution splashes.

3. Allow the cleaning solution to cool to 100°F/38°C.
4. Place a large metal container under the drain valve.

WARNING

Do not use a plastic container. If the cleaning solution is not cool enough, the container will melt; possibly causing you to be burned, and causing cleaning solution to get on the floor.

5. Open the drain valve and allow the cleaning solution to drain into the container.

6. Watch the container to make sure the cleaning solution does not overflow. If the container becomes full, close the drain valve, put another large metal container under the drain valve, and open the drain valve again.

WARNING
Do not allow the cleaning solution to overflow the container. Cleaning solution will get on the floor, and if the solution is not cool enough, you may be burned.

7. When the draining is complete, close the drain valve.
8. Carefully carry the container(s) to the sink and slowly pour the solution into the sink.

WARNING
Thoroughly clean and dry the floor if cleaning solution is spilled. Liquid on the floor can cause serious injury or loss of life.

Rinsing

1. Carefully pour clean, hot water into the kettle, up to the normal level of the shortening. If the cleaner you have used requires that you add a neutralizer, do so now.
2. Allow the water to sit for 5-10 minutes. Then allow it to cool to 100°F/38°C.
3. Place a large metal container under the drain valve.

WARNING
Do not use a plastic container. If the water is not cool enough, the container will melt, possibly causing you to be burned, and causing cleaning solution to get on the floor.

4. Open the drain valve and allow the water to drain into the container.
5. Watch the container to make sure the water does not overflow the container. If the container becomes full, close the drain valve, put another large metal container under the drain valve, and open the drain valve again.

WARNING
Do not allow the water to overflow the container. Water will get on the floor, and if the water is not cool enough, you may be burned.

6. When the draining is complete, close the drain valve.
7. Carefully carry the container(s) to the sink and slowly pour the water into the sink.

WARNING
Thoroughly clean and dry the floor if water is spilled. Water on the floor can cause serious injury or loss of life.

Drying

Dry the kettle, drain valve and burner tubes thoroughly, using a soft cloth. Make sure no water is in the drain or drain tube.

WARNING
Dry all parts of the fryer thoroughly. Failure to dry the fryer and kettle completely will cause an eruption. Shortening will overflow the sides of the fryer and may result in fire, injury, or death.

3 Donut-Making Helps

Tips on Making Quality Cake Donuts

- Use the correct batter temperature.

  In general, the correct batter temperature is 75°-80°F/24°-27°C. Check the mix manufacturer's instructions, as the recommended temperature range may vary.

  If the batter is too warm, the donuts will lack volume and may "ring out" or be misshapen. If the batter is too cold, the donuts will stay under the shortening too long, fry too slowly, and crack open or ball up. They may also absorb excess shortening and lose volume.

- Use the correct floor time.

  A floor time of 10 minutes between mixing and cutting allows the baking powder to react with the water. This helps the donuts attain the proper volume and the proper level of shortening penetration.

  If the floor time exceeds 30 minutes, the mix will gas off, the donuts will lose volume and shape and will absorb too much shortening.

- Use the correct frying temperature.

  The correct shortening temperature for frying is 370°-380°F/188°-193°C.

  If the shortening is too hot, the donuts will fry too quickly on the outside and will lose volume. The donuts may also become dense inside.

  If the shortening is too cold, the donuts will spread too rapidly, will form large rings, will tend to crack open, will be too light in appearance, and will absorb too much shortening.

- Maintain the proper shortening level. We recommend a distance of 1 1/4" between the depositor and the shortening.

  If the shortening is too deep, the donuts may not turn over when they reach the turner, causing them to cook unevenly.

  If the shortening is too shallow (too far below the depositor), the donuts may not drop flat, may turn over while submerging and surfacing, and may become irregular, cracked, or rough-crusted.

- Ensure that the donuts absorb the right amount of shortening.

  Donuts should absorb 1-1/2 to 3 oz/42 to 85 g of shortening per dozen, depending on their weight. You can achieve proper absorption by following tips 1-3.

- If the donuts do not absorb enough shortening, they will not keep well.

  If they absorb too much shortening, they will lose volume and may become misshapen. If this happens, follow tips 1-3, mix the batter a little longer than usual, turn the donuts as soon as they become golden brown, and turn the donuts only once.

Calculating Correct Water Temperature

The following is an example of how to calculate the correct water temperature to use. You must use your own room temperature, dry mix temperature, desired batter temperature, and, if you are making yeast-raised donuts, estimated temperature increase during mixing.

	Cake Donuts		Yeast-Raised Donuts	
	°F	°C	°F	°C
Room temperature	72	22.2	72	22.2
Dry mix temperature	+70	+21.1	+70	+21.1
Total **A**	142	43.3	142	43.3
Desired batter temperature	75	23.9	80	26.7
	x3	x3	x3	x3
Total **B**	225	71.7	240	80.1
Total **B**	225	71.7	240	80.1
-Total **A**	-142	-43.3	-142	-43.3
Desired water temp. for cake donuts	**83°F**	**28.4°C**	98	36.8
			↓	↓
Figure from above			98	36.8
Temperature increases during mixing (average: 30°F/17°C)			-30	-17
Desired water temperature for yeast-raised donuts			**68°F**	**19.8°C**

Ratios of Plunger Sizes to Donut Weights

The weights given are for donuts without icings or other toppings. They are provided for reference only, as weights vary according to the density of the batter.

Plunger Size	Donut Weight per Dozen
1”	5-8 oz/142-227 g
1 5/8”	14-17 oz/397-482 g
1 3/4”	16-20 oz/454-567 g
1 7/8”	19-24 oz/539-680 g
2"	22-27 oz/624-765 g

Temperature Conversion

To convert temperatures from Fahrenheit to Celsius, subtract 32 from °F and divide the result by 1.8. For example, 212°F-32/1.8 = 100°C.

To convert temperatures from Celsius to Fahrenheit, multiply °C by 1.8 and add 32 to the result. For example, (100°C x 1.8) + 32 = 212°F.

°F	°C	°F	°C
55	12.8	340	171.1
60	15.6	345	173.9
65	18.3	350	176.7
70	21.2	355	179.4
75	23.9	360	182.2
80	26.7	365	185.0
325	162.8	370	187.8
330	165.6	375	190.6
335	168.3	380	193.3

618L | 624 | 634

Electric Fryer

Technical Supplement

Part # MN-0019EN 04-05-2023

Belshaw 814 44th Street NW, Suite 103, Auburn, WA 98001 USA
1-800-BELSHAW • 800-578-2547 (USA/Canada) • (+1) 206-322-5474 (International)
service@belshaw.com • www.belshaw.com

Doc: Belshaw-MN0019EN-618L-624-634-v03-040523

EQUIPMENT RECORD

Please provide the information below when you correspond with Belshaw about your machine.

Purchased by _____

Installed by _____

Date of Installation _____

Model number _____

Serial number _____

IN CASE OF DAMAGE TO EQUIPMENT

In case of damage to the equipment upon delivery, follow these steps immediately.

6. Inform the freight carrier. The phone number will be on the shipping receipt or label.
7. Take photographs of the equipment, both inside and outside the box or crate.
8. Do not throw away any packaging.
9. Report the damage to the distributor (or other party) from whom you bought the equipment.
10. Email your photos to the distributor (or other party) AND to Belshaw Customer Service at service@belshaw.com. Include a Belshaw Order Number in your communications. Your Order Number has 6 digits and should be marked on the box or crate.

IN CASE OF MISSING ITEMS

4. If possible, note the missing items on the delivery receipt of the freight carrier.
5. Take photographs of the entire shipment.
6. Follow steps 2 – 5 above.

Belshaw 814 44th Street NW, Suite 103, Auburn, WA 98001 USA

1-800-BELSHAW • 800-578-2547 (USA/Canada) • (+1) 206-322-5474 (International)

service@belshaw.com • www.belshaw.com

Contents

Technical Supplement

Before you start ***4***

1 Installation ***5***

Unpacking the Fryer 5
Initial Cleaning 5
Installing the Fryer 5
Moving the Fryer 6
Mounting the Drain Tray 6
Assembling the Frying Screen Handles 7

2 Troubleshooting ***8***

3 Diagrams & Parts Lists ***11***

Operator's Manual ***> Located before Technical Supplement***

- Printed separately for CE / European Union manuals

Before you start

The 618L, 624, and 634 Electric Fryers are designed to fry cake and yeast-raised donut products. Each must be bolted to a flat, dry floor. The operator should stand opposite the heater head.

The operator must work safely at all times and read this manual and follow its instructions and warnings. A thorough understanding of how to install, maintain, and safely operate the fryer will prevent production delays and injuries.

Heed the following warnings and all other warnings that appear in this manual:

- Make sure the machine is bolted securely to the floor. Doing so will prevent the machine from moving, tipping, or falling, which could cause serious injury.
- To avoid damaging the machine, never use force to assemble, disassemble, operate, clean, or maintain it.
- Never let water and hot shortening come in contact with each other. Moisture causes hot shortening to spatter, which may cause serious burns.
- Do not overfill the kettle with shortening. If shortening overflows the kettle, it could cause serious burns or could cause someone to slip on the floor and be seriously injured.
- Hot shortening can cause serious burns. Make sure that the system and the shortening are cool before attempting any cleaning, adjustment, disassembly, or repair.
- To avoid electrocution or other injury, unplug the machine before attempting any cleaning, adjustment, disassembly, or repair.
- Be careful never to get shortening, water, or other materials on the floor. If anything does get spilled on the floor, mop it up immediately. Materials on the floor can cause people to slip or fall, resulting in serious injury or loss of life.
- To prevent unintentional startup and possible fire, unplug the machine if there is a local power outage. When the power is restored, it is safe to plug the machine in again.
- To avoid risk of fire, do not install the unit closer than six (6) inches to a back wall and two (2) inches to the side walls.
- To avoid electrocution, make sure that all electrical cords are not frayed or cracked and that they do not pass through any water or shortening.
- For supply connections, use 10AWG wires suitable for at least 75 °C.
- Make sure that all electrical cords are routed so that no one will trip over them.

1 Installation

Unpacking the Fryer

1. Use a forklift to transport the shipping crate to the workstation.
2. Break down the shipping crate.
3. Remove all the packing materials from the fryer. These include foam, tape, brown paper, plastic, and white protective coating.
4. Position the fryer to allow sufficient space on either end of the machine for any equipment you plan to use with it.

Initial Cleaning

Clean your fryer before using it. Wipe the inside of the kettle with a soft, damp cloth. Dry the kettle thoroughly.

WARNING

To avoid electrocuting yourself or damaging the machine, never allow water, steam, cleaning solution, or other liquid to enter the heater head or the electrical box.

WARNING

Never let water and hot shortening come in contact with each other. Moisture causes hot shortening to spatter, which may cause serious injury. Prior to use, make sure the kettle and any other parts you have washed are dry.

Installing the Fryer

1. Make sure the power requirements of the machine, found on the data plate on the back of the heater head assembly, match your power source.
2. Using a forklift or pallet jack, lift the fryer cabinet and screw each leg in as far as it will go.
3. Set the fryer cabinet on a flat, dry floor.

WARNING

To avoid risk of fire, do not install the unit closer than six (6) inches to a back wall and two (2) inches to the side walls.

4. Level the fryer. Follow these steps:
   a. Check to see if the fryer is level. To do so, place a level across the top of the fryer cabinet.
   b. If the fryer is not level, lift the fryer using a forklift or pallet jack, and turn the legs to adjust them.
   c. Using the forklift or pallet jack, lower the fryer to the floor. Be sure that all the legs rest on the floor when the fryer is level.
5. Bolt the fryer to the floor. The foot of each leg has two holes in it for this purpose.

WARNING

To avoid serious burns, other injury, or death, make sure the fryer is securely fastened to the floor so it will not tip or fall over.

6. Connect the fryer to a properly grounded power source.
   a. For supply connections, use 10AWG wires suitable for at least 75 °C.

Moving the Fryer

If you ever want to move the fryer to a different workstation, follow this procedure:

1. Turn off the fryer and disconnect it from the power source.
2. Allow the machine and the shortening to cool.

WARNING
Do not touch hot shortening. It can cause serious burns.

3. Remove the shortening from the fryer as explained in "Removing the Shortening" in Section 3.

WARNING
To avoid burns, falls, other injury, or death, never attempt to move the fryer when it has shortening or other liquid in it.

WARNING
Thoroughly clean and dry the floor if shortening is spilled. Materials on the floor can cause people to slip or fall, resulting in serious injury or loss of life.

4. Remove the bolts that secure the fryer to the floor.
5. Using a forklift, transport the machine to the new workstation.
6. Level the fryer, bolt it to the floor, and connect it to the power source, as explained in "Installing the Fryer" above.

Mounting the Drain Tray

The drain tray is mounted on the right side of the fryer in the factory. To move the drain tray on the left side, see the diagram below and follow these steps.

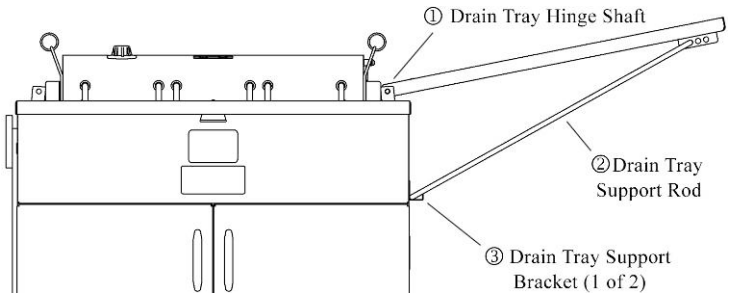

1. Remove the acorn nut from the back side of the drain tray hinge shaft (Diagram ①)
2. Slide the drain tray hinge shaft out of the drain tray mounting brackets (Diagram ②)
3. Lift off the drain tray.
4. Remove the two drain tray support brackets that are mounted on the right side of the cabinet (Diagram ③)
5. Install the drain tray support brackets on the left side of the cabinet. Each bracket is held in place by two hex-head machine screws, two hex nuts, two internal tooth lock washers, and two flat washers. Tighten all of these securely.
6. Put the drain tray in place on the left side of the fryer. The holes on the drain tray should line up with the holes in the mounting brackets on the left side.
7. Slide the drain tray hinge shaft through the holes in the mounting brackets and the drain tray.

8. Tighten the acorn nut (removed in step 1) on the end of the drain tray hinge shaft.
9. Lift the drain tray support rod (Diagram ②) so it is held in place by the support brackets installed on the left side in Step 5.

Assembling the Frying Screen Handles

(Be aware that you may be using detachable handles rather than fixed handles, particularly when making raised donuts using screens which are placed inside a proofer. In this case, your handles should NOT be attached to screens.)

Frying Screens come with handles and hardware unassembled. When assembled the location of the handles should be as follows:

- For Model 618L and 718L Fryers, center the handles along the long sides of the screen.
- For Models 624 and 724, center the handles along any opposing sides of the screen.
- For Models 634 and 734, center the handles along the short sides of the screen.

To assemble Frying Screens, refer to Figure 1 opposite.

1. Install #10-32 Nuts (B) on threaded handle rods (A).
2. Locate clips (D) on the screen (C). Center the handles as listed above for each type of fryer.
3. Insert threaded end of handle (A) with handle to outside as shown, making sure that the spacer (E) is in place.
4. Install #10-32 nuts (F) flush onto threaded end of handle (A)
5. Tighten #10-32 Nuts (B) locking handle assembly to screen.

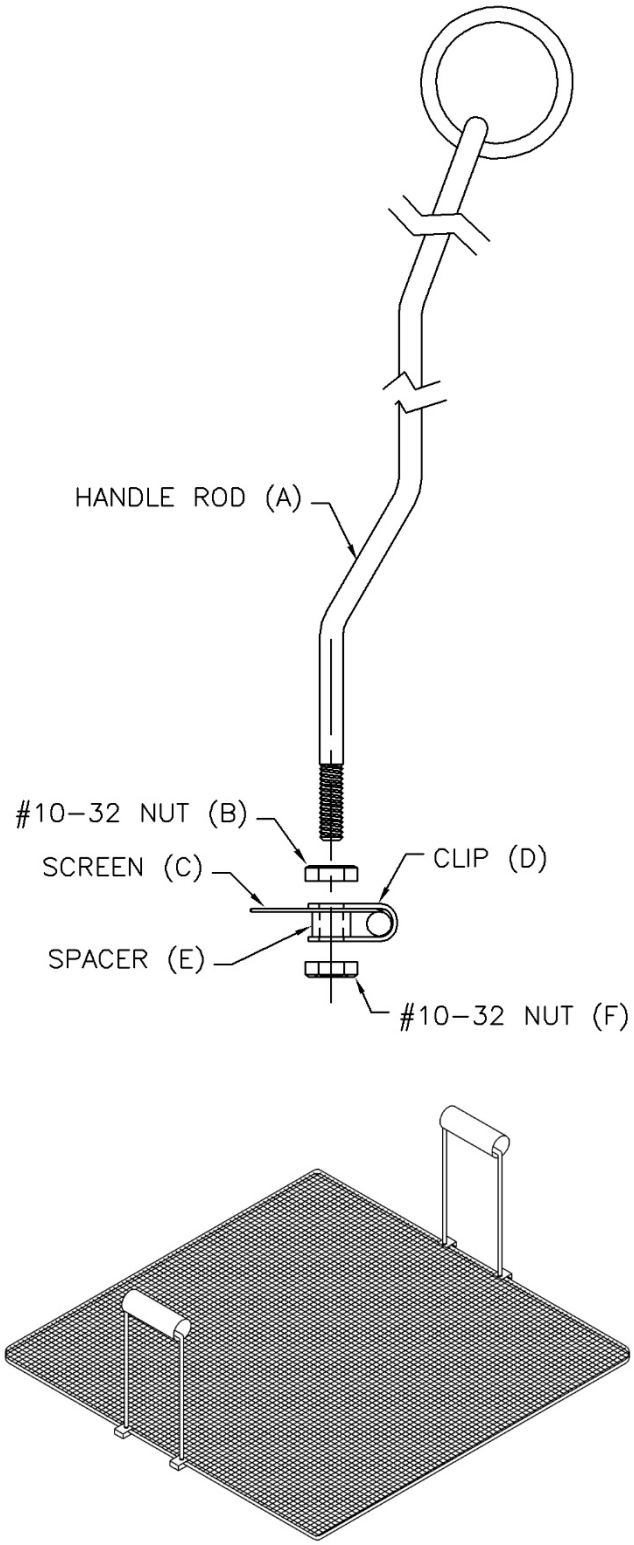

(Above: Figure 1)

2 Troubleshooting

If you have a problem with your fryer that you cannot solve, call your dealer or another qualified technician.

If your dealer cannot help you, please call Belshaw Bros. at (206)322-5474. When you call, please specify the following:

- The model name of the machine.
- The serial number of the machine.
- The voltage, phase, and cycle of the machine.

CAUTION
If you perform repairs yourself or have them performed by anyone other than a service technician authorized by Belshaw Bros., you do so at your own risk.

WARNING
Disconnect the machine from the power source before disassembling, repairing, or wiring

THE FRYER WILL NOT TURN ON OR HEAT	
Possible Causes	**What To Do**
The on/off switch is not in the ON position.	Move the on/off switch to the ON position. The on/off switch is located inside the fryer cabinet, on the right-hand side.
The thermostat is not turned on.	On the digital temperature controller, increase the target temperature to a setting that is high enough to make the "Heating" pilot light come on.
The high-temperature limit control switch has been tripped.	Press the red reset button on the back of the heater head.
	WARNING
	Before doing any of the following, turn off the machine and allow the shortening to cool.
The primary power distribution circuit breaker has been tripped.	Flip the circuit breaker. The circuit breaker is visible through an access cutout in the electrical box. (The electrical box is inside the cabinet, in the back.)
A fuse is blown.	Replace the fuse.

THE HEATING ELEMENTS FAIL TO MAINTAIN THE PROPER TEMPERATURE	
Possible Causes	**What To Do**
	WARNING
	Before doing any of the following, turn off the machine and allow the shortening to cool.
The thermostat is out of adjustment.	Adjust thermostat calibration. See "Temperature Controller Programming Procedure" in Appendix.
The thermostat is defective.	Replace the thermostat.
Sediment has accumulated around the thermostat bulb.	Remove the shortening from the fryer, as explained in Section 3, "Cleaning." Remove the sediment from the thermostat bulb.

THE HEATING ELEMENTS WILL NOT HEAT	
Possible Causes	**What To Do**
The fryer's circuit breaker has been tripped.	Press the red reset button on the back of the heater head.
The high-temperature limit control switch has been tripped.	Press the red reset button on the back of the heater head.
	WARNING
	Before doing any of the following, turn off the machine and allow the shortening to cool.
The contactor is defective.	Replace the contactor.
A heating element is defective.	Replace the defective heating element.
The high-temperature limit control is defective.	Replace the high-temperature limit control.
The thermostat is out of adjustment.	Adjust thermostat calibration. See "Temperature Controller Programming Procedure" in Appendix.
The digital temperature controller is defective.	Replace the controller.

3 Diagrams & Parts Lists

See Parts List on following pages.

Parts List Drawing Insert Page

Title:	**Open Kettle**
Model:	**624**
Item Number:	**21285 624-380/415,50/60,3-B**
Final Assembly Drawing:	**624-2002 Final Assembly Drawing**
Sub-Assemblies:	**624-1300 624 Mech Sub-Assy**
	624-1062 Pre Wire Panel Assy EXP/CE
	624-1515-380A Heater Head Assy 380V
Wiring Diagram:	**624-4104 Electrical Assembly Drawing**

BILL OF MATERIAL			
ITEM	QTY	PART NUMBER	DESCRIPTION
1	1	624-1062	PREWIRE PANEL ASSY EXP/CE
2	1	624-1300	MECHANICAL SUB-ASSY
3	1	624-1515-380A	HEATER HEAD ASSY 380V

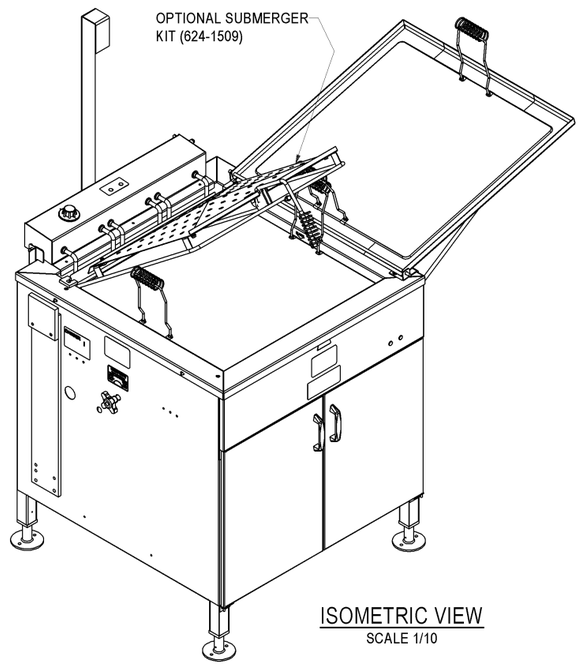

ISOMETRIC VIEW
SCALE 1/10

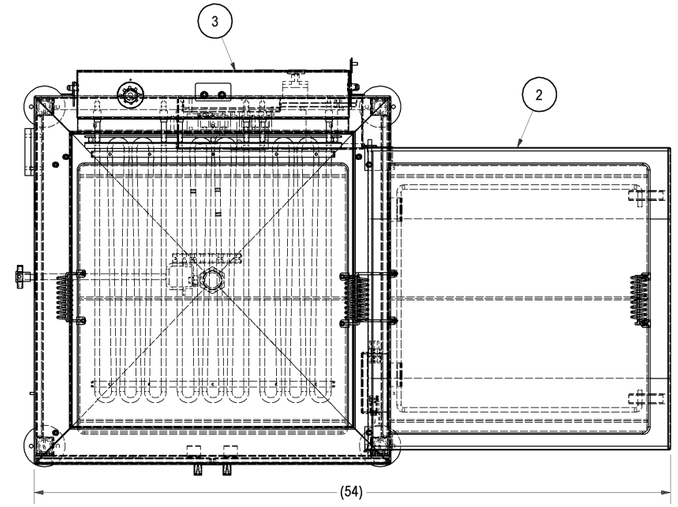

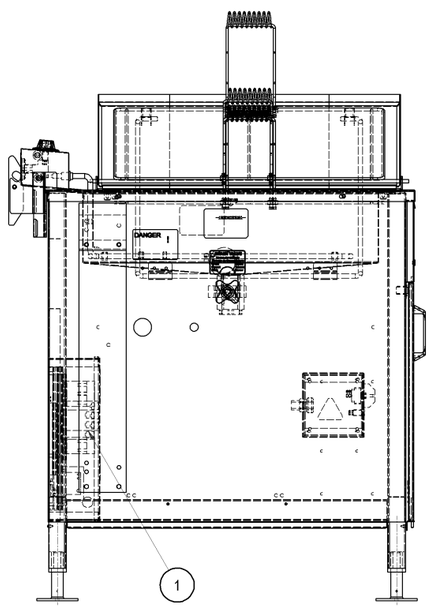

VIEW A-A
SCALE 1:8

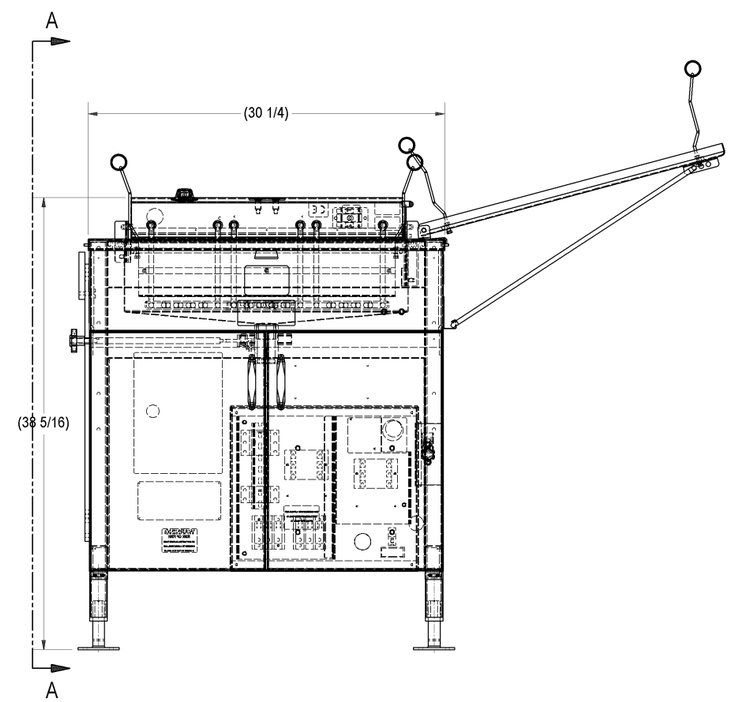

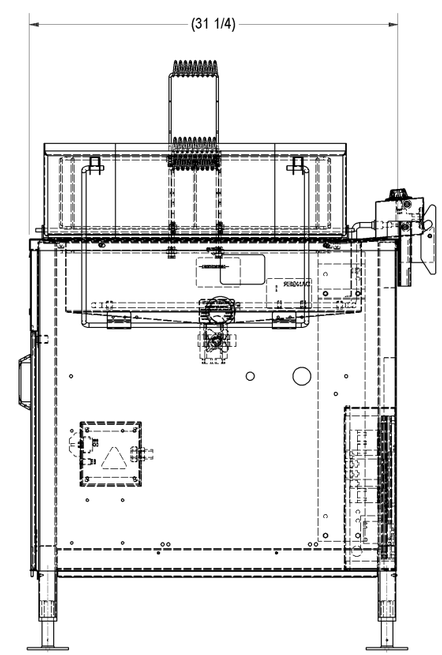

REV	ECR#	DESCRIPTION	DRAWN	DATE	APP'D	MFR

THE INFORMATION CONTAINED IN THIS DRAWING IS THE SOLE PROPERTY OF BELSHAW BROS., INC. ANY REPRODUCTION IN PART OR WHOLE WITHOUT THE WRITTEN PERMISSION OF BELSHAW BROS., INC. IS PROHIBITED.

UNLESS OTHERWISE SPECIFIED, DIMENSIONS ARE IN INCHES
TOLERANCES, UNLESS OTHERWISE NOTED:
X/X = ± 1/32 ( ) = REFERENCE
.XX: ± .030 .XXX = ± .010
ANGLE = ± 1°

DO NOT SCALE DRAWING

SCALE	DRAWN	APP'D	MFR	DATE
1:8	REM	JD	-	09/28/09

Belshaw
BELSHAW BROTHERS INC., SEATTLE, WASHINGTON

TITLE: 624 FRYER ASSY, 380/415

MATERIAL: SEE B.O.M.

SIZE	SHEET	DRAWING NUMBER	REV
C	1 OF 1	624-2002	-

G:_PROJECT WORKSPACE\Rolando Monetti\624-2002.iam

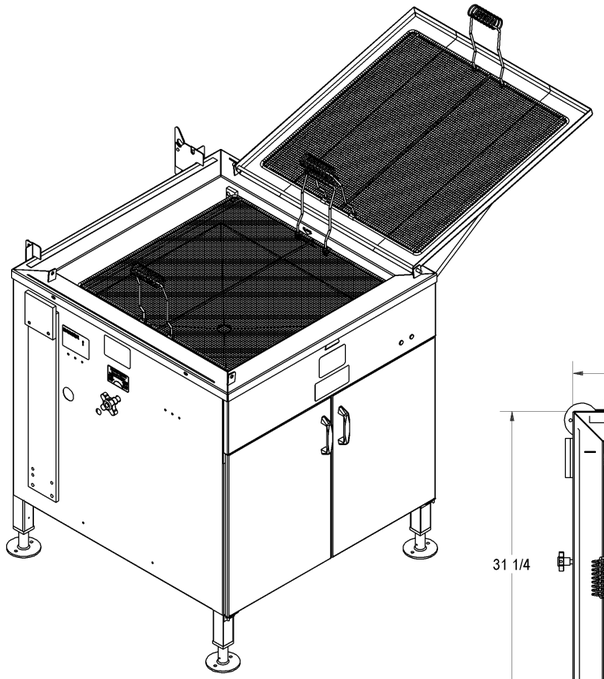

ISOMETRIC VIEW

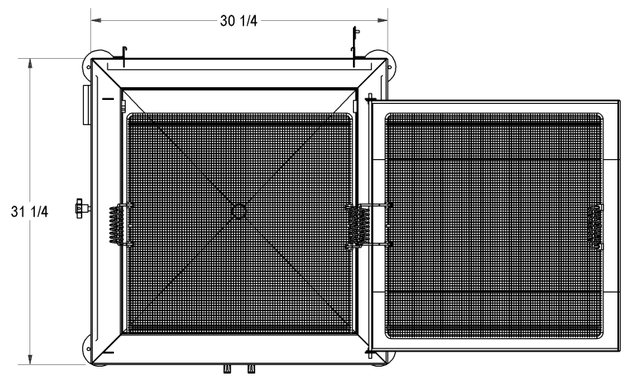

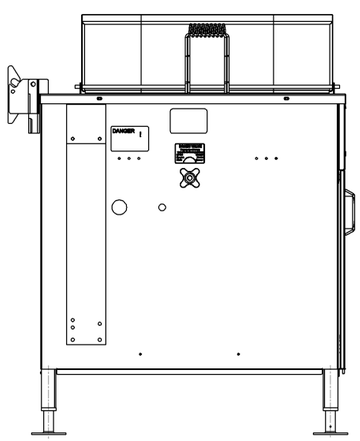

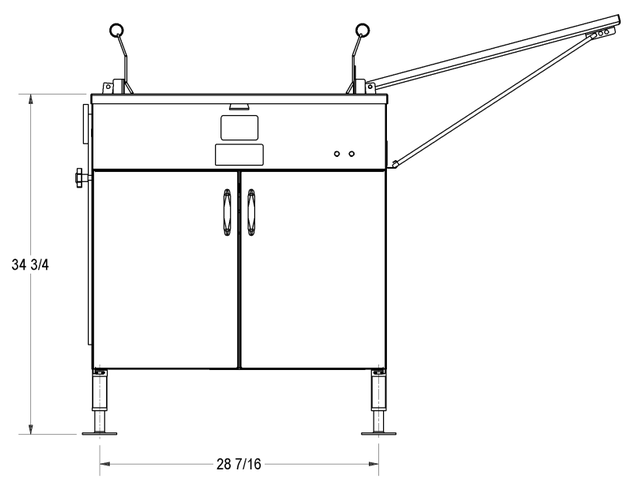

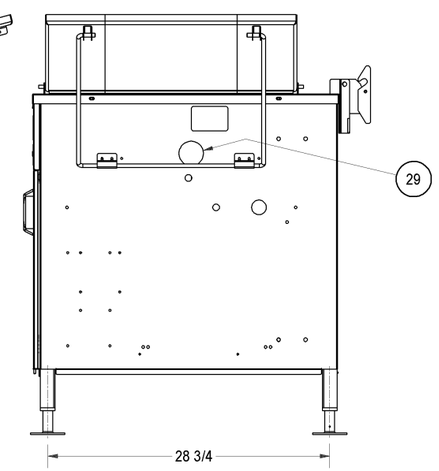

4 BILL OF MATERIAL

	ITEM	QTY	PART NUMBER	DESCRIPTION
	1	1	EP18/24-0140	LABEL; BELSHAW LOGO
	2	1	LBL-0013	LABEL; SUPPLY CONNECT 10AWG
	3	1	LBL-0014	LABEL; INSTALLATION WARNING
	4	1	MDD-0459	LABEL; WARNING; HAZ VOLTAGE
	5	3	MK-0186	LABEL; CAUTION - HOT
	6	1	P-0001	CUTTER MOUNT CLAMP BAR-LOWER
	7	1	P-0002	BRACKET PLATE (CUTTER MOUNT)
	8	1	618-0128	LABEL; GROUND
	9	1	618-0131	GROUND LUG
	10	1	618-0170	ELECTRICAL BOX COVER
	11	1	618-0540	ELECTRICAL BOX SUB-ASSEMBLY
	12	1	618L-0098	DRAIN VALVE KNOB, EXT.
	13	1	618L-0103	LABEL, DRAIN VALVE
	14	1	618L-0105	LABEL; DANGER; FASTEN TO FLOOR
	15	1	618L-0125	TILT LATCH
	16	1	618L-0130	HEATER HEAD RETAINING BRACKET- LEFT
	17	1	618L-0131	HEATER HEAD RETAINING BRACKET-RIGHT
	18	1	618L-1045	CONTROL SWITCH BOX
	19	1	624-0037	DRAIN TRAY SUPPORT ROD
	20	2	624-0039	DRAIN TRAY SUPPORT REST - FRONT
	21	1	624-0170	CUTTER MOUNT CLAMP BAR-UPPER
	22	1	624-0174	DRAIN VALVE - BALL
4	23	1	624-1057	KETTLE ASSEMBLY
	24	2	624-1058	FRYING SCREEN ASSEMBLY
	25	1	724G-0088	DRAIN TRAY HINGE SHAFT
	26	1	724G-0183	SHORTENING CAUTION LABEL
	27	2	724G-0186	DOOR MAGNET
	28	2	724G-0203	DOOR HANDLE
	29	1	724G-0206	2" PLUG BUTTON
	30	4	724G-0207	DOOR HOLE PLUG
	31	2	724G-0299	DOOR MOUNTING BRACKET-LOWER
	32	1	724G-0312	"INSTALLATION WARNING" LABEL
	33	2	724G-0313	HINGE SPACER
	34	1	724G-0538L	DOOR ASSEMBLY-LEFT
	35	1	724G-0538R	DOOR ASSEMBLY-RIGHT
	36	1	724G-0540	DRAIN TRAY ASSEMBLY
	37	1	724G-0556	EXTENSION ROD ASSEMBLY W/HANDLE
4	38	1	724G-1011	CABINET WLDT
	39	1	(REF)	PRE-WIRE PANEL SUB-ASSY

REV	ECR#	DESCRIPTION	DRAWN	DATE	APP'D	MFR
1	12493	ADD 951-0012N-5	REM	04/21/09	JD	
2	12625	DELETE ITEM 951-0012N-5	TOI	08/19/09	LCP	
3	13292	DRAWING REVISED WITH UPDATED 624-1057 & 724G-1011	TOI	09/20/10	LCP	
4	13340	DEL 618L-0127R & 618L-0127L; DRAWING REVISED WITH UPDATED 624-1057 & 724G-1011; RE-SORT BOM	TOI	10/20/10	LCP	

THE INFORMATION CONTAINED IN THIS DRAWING IS THE SOLE PROPERTY OF BELSHAW BROS., INC. COPYRIGHT BELSHAW BROS., INC. 2007. ANY REPRODUCTION IN PART OR WHOLE WITHOUT THE WRITTEN PERMISSION OF BELSHAW BROS., INC. IS PROHIBITED.

UNLESS OTHERWISE SPECIFIED, DIMENSIONS ARE IN INCHES
TOLERANCES, UNLESS OTHERWISE NOTED:
X/X = ± 1/32 ( ) = REFERENCE
.XX: ± .030 .XXX = ± .010
ANGLE = ± 1°

DO NOT SCALE DRAWING

SCALE	DRAWN	APP'D	MFR	DATE
1:10	TOI	SC	-	10/15/08

Belshaw
BELSHAW BROTHERS INC., SEATTLE, WASHINGTON

TITLE: MECHANICAL SUB-ASSY

MATERIAL: SEE B.O.M.

SIZE	SHEET	DRAWING NUMBER	REV
C	1 OF 2	624-1300	4

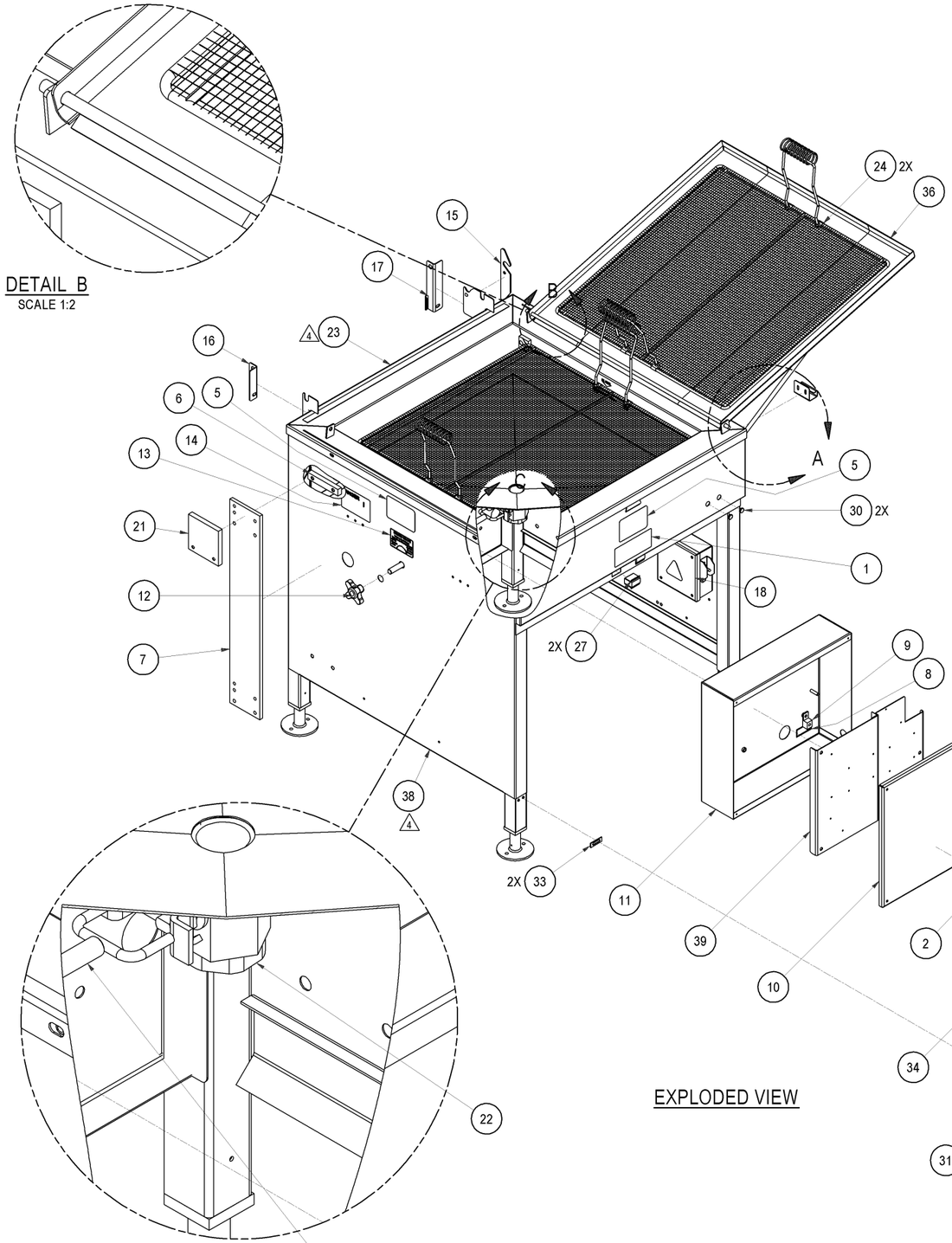

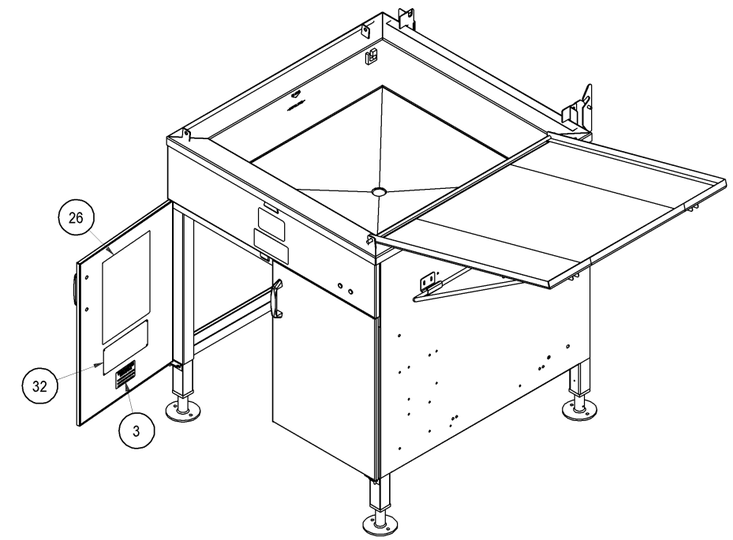

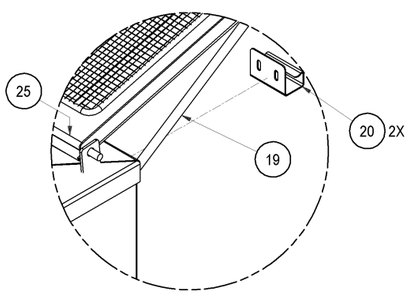

DETAIL A
SCALE 1/4

THE INFORMATION CONTAINED IN THIS DRAWING IS THE SOLE PROPERTY OF BELSHAW BROS., INC. ANY REPRODUCTION IN PART OR WHOLE WITHOUT THE WRITTEN PERMISSION OF BELSHAW BROS., INC. IS PROHIBITED.

UNLESS OTHERWISE SPECIFIED, DIMENSIONS ARE IN INCHES
TOLERANCES, UNLESS OTHERWISE NOTED:
X/X = ± 1/32 ( ) = REFERENCE
.XX: ± .030 .XXX = ± .010
ANGLE = ± 1°

DO NOT SCALE DRAWING

Belshaw
BELSHAW BROTHERS INC., SEATTLE, WASHINGTON

TITLE: MECHANICAL SUB-ASSY

MATERIAL: SEE B.O.M.

SEE SHEET 1 FOR CURRENT REVISION INFORMATION

SCALE	DRAWN	DATE	SIZE	SHEET	DRAWING NUMBER	REV
1:8	TOI	10/15/08	C	2 OF 2	624-1300	4

G:\RELEASED DESIGNS\624\624-1300.iam

BILL OF MATERIAL			
ITEM	QTY	PART NUMBER	DESCRIPTION
1	1	CBR-0013-32	CIRCUIT BREAKER 3P 32A
2	2	TM634-0233	POWER DISTRIBUTION BLOCK
3	1	618-0541	PRE-WIRE PANEL SUB-ASSY
4	2	624-0144	MAGN CONTACTOR 40A 208/240 COIL
5	1	990-0260-7.25	DIN RAIL, 34mm X 7.5mm
6	1	CBR-0012-6	CIRCUIT BREAKER 2P 6A

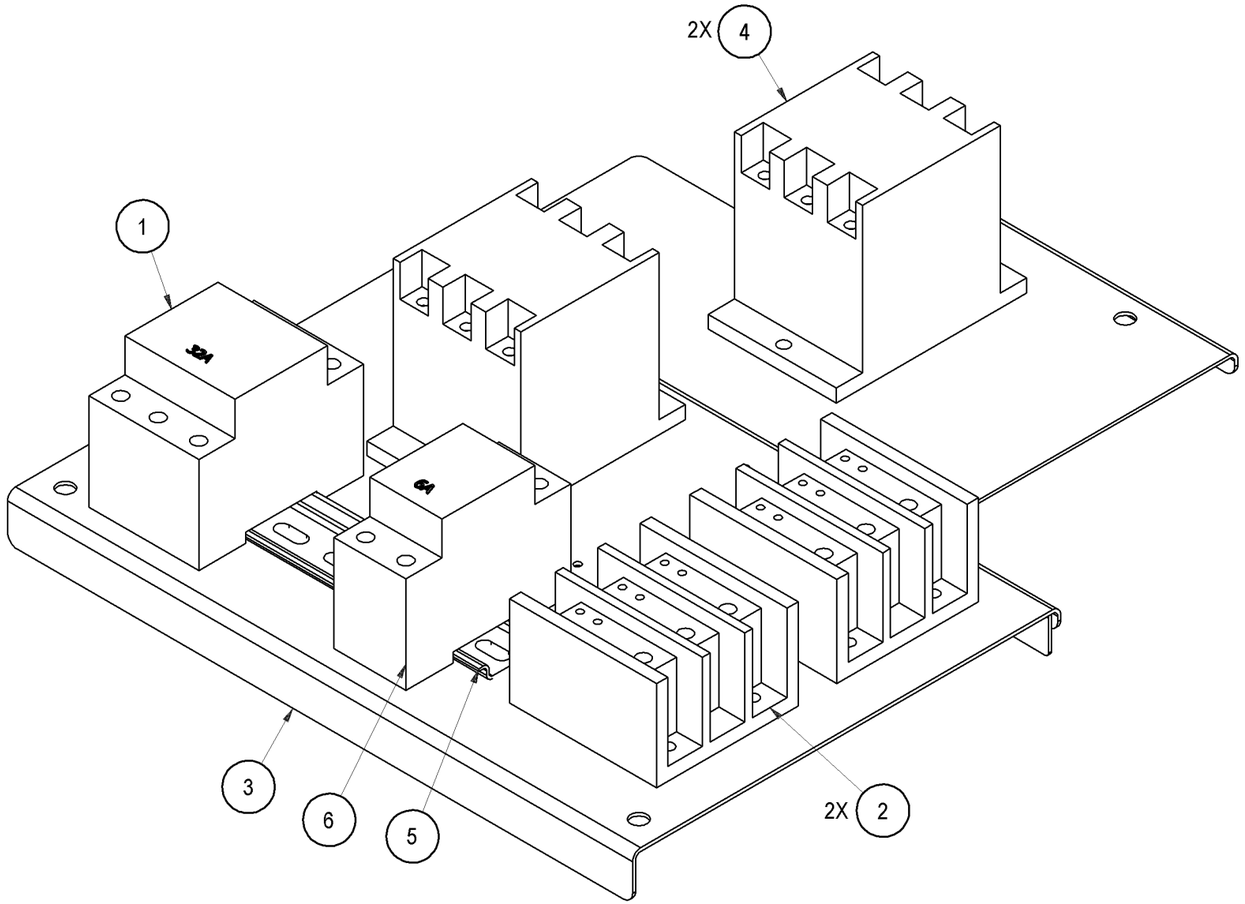

ISOMETRIC VIEW
SCALE 1/2

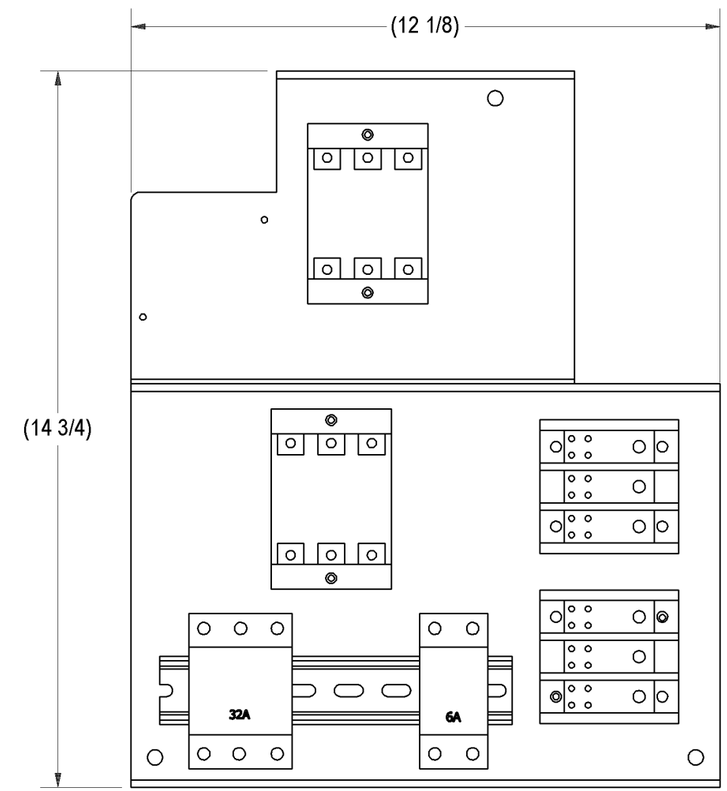

REV	ECR#	DESCRIPTION	DRAWN	DATE	APP'D	MFR

THE INFORMATION CONTAINED IN THIS DRAWING IS THE SOLE PROPERTY OF BELSHAW BROS., INC.
COPYRIGHT BELSHAW BROS., INC. 2007. ANY REPRODUCTION IN PART OR WHOLE WITHOUT
THE WRITTEN PERMISSION OF BELSHAW BROS., INC. IS PROHIBITED.

UNLESS OTHERWISE SPECIFIED, DIMENSIONS ARE IN INCHES
TOLERANCES, UNLESS OTHERWISE NOTED:
X/X = ± 1/32 ( ) = REFERENCE
.XX: ± .030 .XXX = ± .010
ANGLE = ± 1°

DO NOT SCALE DRAWING

BELSHAW BROTHERS INC., SEATTLE, WASHINGTON

TITLE: PREWIRE PANEL ASSY EXP/CE

MATERIAL: SEE B.O.M.

SCALE	DRAWN	APP'D	MFR	DATE	SIZE	SHEET	DRAWING NUMBER	REV
1:3	REM	JD	-	09/28/09	B	1 OF 1	624-1062	-

G:_RELEASED DESIGNS\6246\624-1062.iam

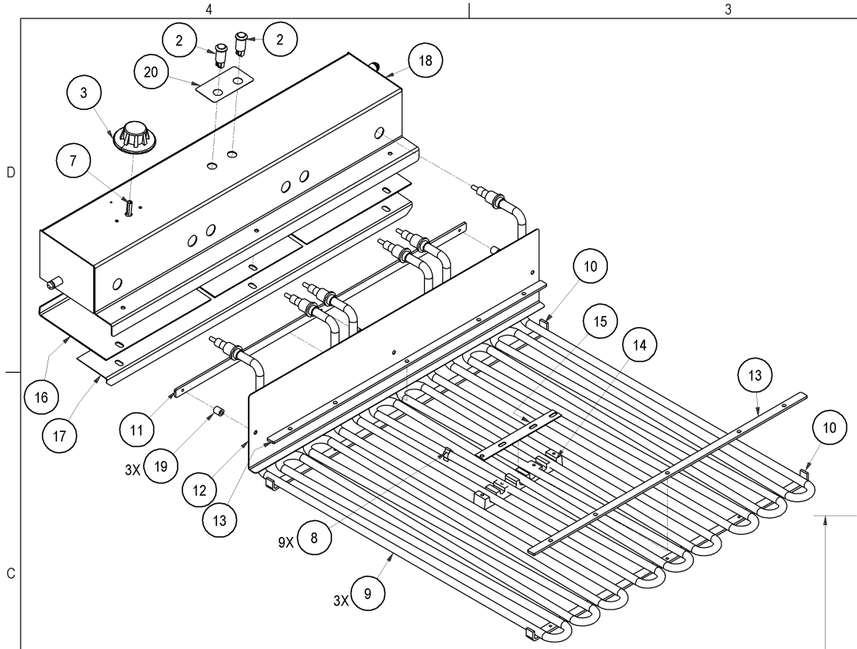

EXPLODED VIEW

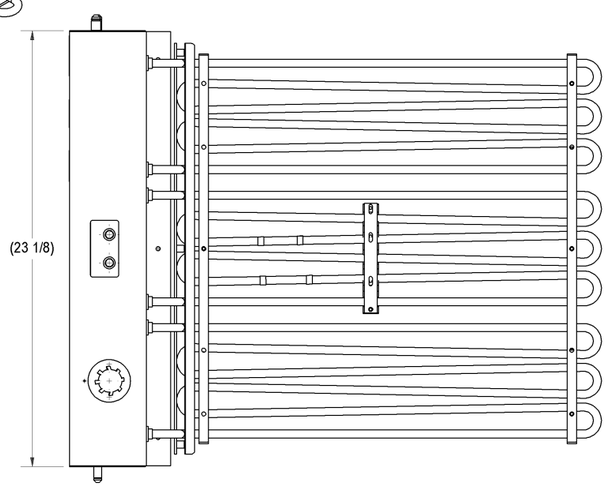

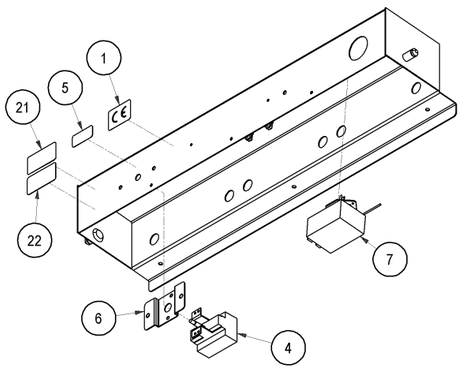

EXPLODED VIEW
(INTERNAL BOX COMPONENTS)

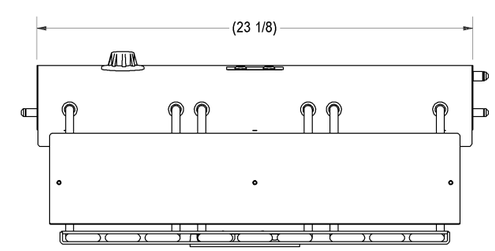

BILL OF MATERIAL

ITEM	QTY	PART NUMBER	DESCRIPTION
1	1	#LBL-0002	LABEL, CE
2	2	#PLT-0001	PILOT LIGHT,CLEAR, 240V CE
3	1	DR42-0338	KNOB, THERMOSTAT, EXPORT
4	1	FM200-0065M	HI LIMIT, PANEL MOUNT
5	1	FM200-0066	LABEL; TEMPERATURE CUT OUT
6	1	MK-0283	HIGH LIMIT MOUNTING BRACKET
7	1	618-0008	THERMOSTAT; SINGLE POLE
8	9	618L-0100	THERM BULB CLIP
9	3	624-0001C	HEATER ELEMENT 200/240V
10	2	624-0054	ELEMENT TIE BAR-LOWER
11	1	624-0077	ELEMENT SHIELD BAR
12	1	624-0078	ELEMENT SHIELD
13	2	624-0114	ELEMENT TIE BAR-UPPER
14	1	624-0119	BRKT; BULB
15	1	624-0120	BULB BRACKET PLATE
16	1	624-0168	HEATER HEAD BOTTOM
17	1	624-0169	HEATER HEAD SKIRT
18	1	624-0542	HEATER HEAD CASE ASSEMBLY
19	3	634-0041	ELEMENT SHIELD SPACER
20	1	724G-0204	LABEL;PILOT LIGHT
21	1	904-0035	LABEL; ETL LISTED; NSF STD 4
22	1	904-0040	LABEL; ETL LISTED; UL STD 197

REV	ECR#	DESCRIPTION	DRAWN	DATE	APP'D	MFR

THE INFORMATION CONTAINED IN THIS DRAWING IS THE SOLE PROPERTY OF BELSHAW BROS., INC. ANY REPRODUCTION IN PART OR WHOLE WITHOUT THE WRITTEN PERMISSION OF BELSHAW BROS., INC. IS PROHIBITED.

UNLESS OTHERWISE SPECIFIED, DIMENSIONS ARE IN INCHES
TOLERANCES, UNLESS OTHERWISE NOTED:
X/X = ± 1/32 ( ) = REFERENCE
.XX: ± .030 .XXX = ± .010
ANGLE = ± 1°

DO NOT SCALE DRAWING

Belshaw
BELSHAW BROTHERS INC., SEATTLE, WASHINGTON

TITLE: HEATER HEAD ASSY 380V

MATERIAL: SEE B.O.M.

SCALE	DRAWN	APP'D	MFR	DATE	SIZE	SHEET	DRAWING NUMBER	REV
1:5	REM	JD	-	09/28/09	C	1 OF 1	624-1515-380A	-

G:\ PROJECT WORKS\P-ACE\Rolando\Monetary\ECR Rolando\624-1515-380A.iam

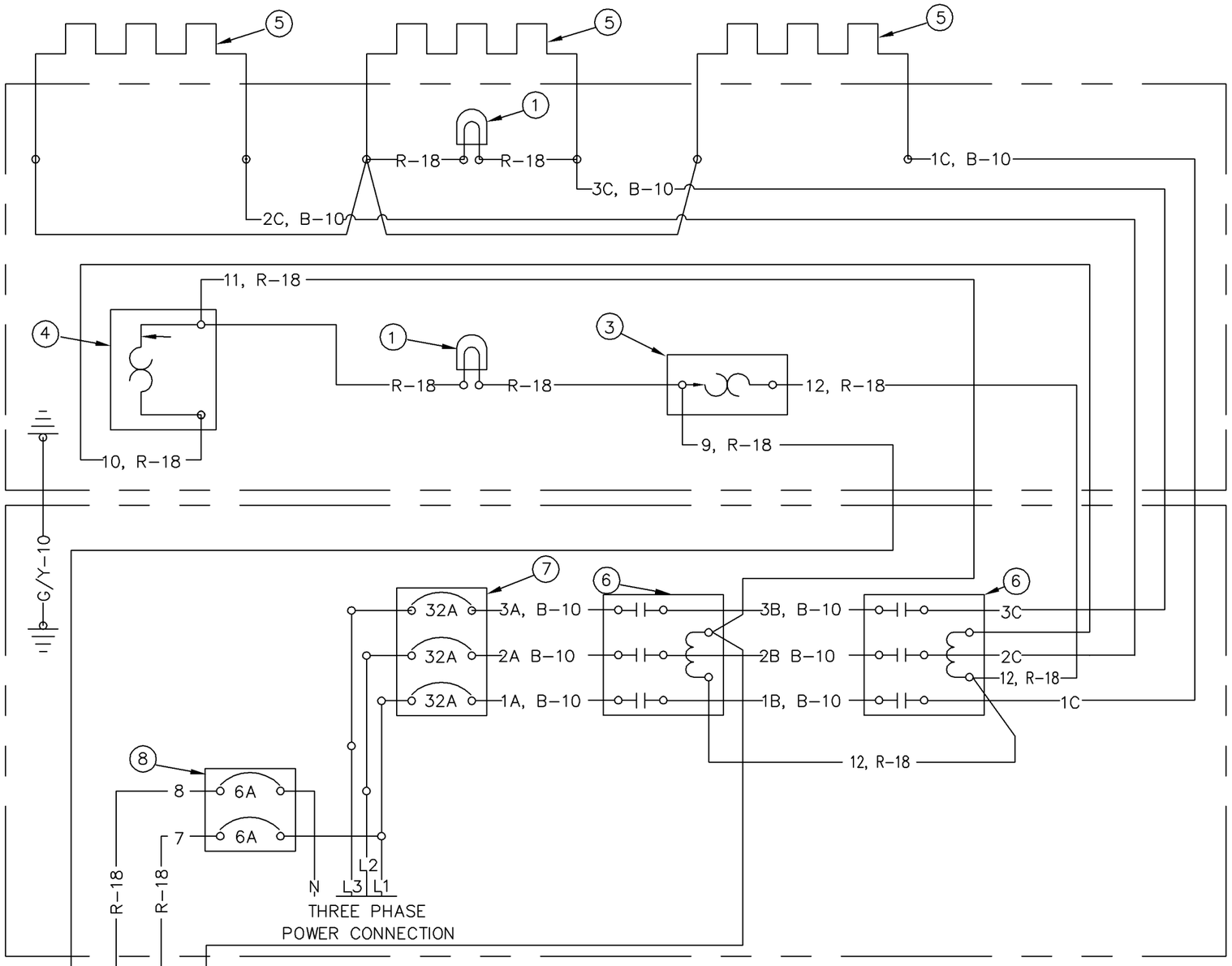

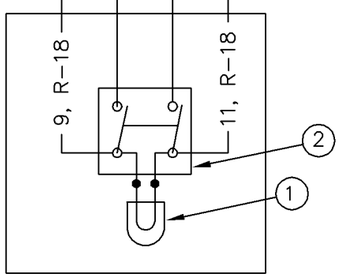

DATA TAG

380 VOLT	415 VOLT
50 HERTZ	50 HERTZ
3 PHASE	3 PHASE
24 AMPS	26 AMPS
15.5 K.W.	18.5 K.W.

CONPONENT LIST

ITEM	QTY	PART NO.	DESCRIPTION
1	3	PLT-0001	PILOT LIGHT, 250 VOLT, CLEAR NEON
2	1	624-0003A	TOGGLE SWITCH, DPST, 250 VOLT
3	1	FM200-0065M	HI-TEMP LIMIT CONTROL
4	1	618-0008	THEMOSTAT
5	3	624-0001C	HEATER ELEMENT-6200W @ 240V
6	2	624-0144	MAGNETIC CONTACTOR, 40 AMP
7	1	CBR-0013-32	CIRCUIT BREAKER, 3P, 32 AMP
8	1	CBR-0012-6	CIRCUIT BREAKER, 2P, 6 AMP
9	2	TM634-0233	POWER DISTRIBUTION BLOCK, 3 POLE (NOT SHOWN)
10	1	618-0541	PREWIRE PANEL (NOT SHOWN)
11	–	–	–
12	2	ACS-0002	COVER, POWER DIST BLOCK. (NOT SHOWN)

1. USE 105°C MACHINE TOOL WIRE
2. THIS DEVICE IS CE CERTIFIED. DO NOT MAKE ANY CHANGES WITHOUT FIRST REVIEWING THE TECHNICAL CONSTRUCTION FILE.
3. DO NOT USE WIRE NUTS. USE WIRE JOINTS AND HEATSHRINK, AS SHOWN BELOW.

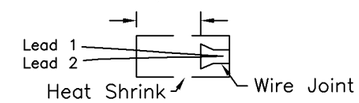

4. USE FULLY INSULATED QUICK-DISCONNECTS ONLY.
5. ANY LIVE TERMINALS OR POSTS MUST BE INSULATED WITH HEATSHRINK TUBING.
6. ALL TOGGLE SWITCHES MUST HAVE GUARDS.
7. CE WIRE COLOR RECOMMENDED STANDARDS (PER EN 60204-1)
   - L1-BROWN
   - L2-BLACK
   - L3-GREY
   - N -LIGHT BLUE
   - AC POWER CIRCUITS-BLACK
   - AC CONTROL CIRCUITS-RED
   - DC CONTROL CIRCUITS-BLUE
   - GROUND-GREEN/YELLOW

ECR	REV	REVISION	DRAWN	DATE	APP'D	MFG
--	-	--	--	--	--	

TOLERANCE UNLESS NOTED:
X/X: ±1/32
( ): REFERENCE
.XX: ±.030
.XXX: ±.010
ANGLE: ±1°

BELSHAW BROS., INC. SEATTLE, WASHINGTON

THE INFORMATION CONTAINED IN THIS DRAWING IS THE SOLE PROPERTY OF BELSHAW BROS., INC.
ANY REPRODUCTION IN PART OR WHOLE WITHOUT THE WRITTEN PERMISSION OF BELSHAW BROS., INC. IS PROHIBITED.

TITLE: W/D - 624 FRYER (CE/EXP) 380/415V, 3 PH + N

MATERIAL:

B	NA	JD	9/28/09	JD		624-4104	— —
DWG SIZE	SCALE	DRAWN	DATE	APP'D	MFG	DRAWING NO. SHEET 1 OF 1	REV

Belshaw Adamatic Bakery Group

Limited Warranty / Return Policy

Subject to the terms and limitations set forth in this limited warranty ("Limited Warranty"), Belshaw Adamatic Bakery Group (also referred to as "the Manufacturer") warrants to the original purchaser ("Purchaser") of Manufacturer's equipment and parts ("Products"), Belshaw Adamatic Bakery Group's manufacture and assembly of Products to be free from defects in workmanship and material which would result in product failure under normal use and service. Belshaw Adamatic Bakery Group's entire liability under this Limited Warranty is limited to either repairing or replacing at Manufacturer's factory or on Purchaser's premises, at Belshaw Adamatic Bakery Group's option, any Products purchased by Purchaser which shall be determined by the Manufacturer to be defective. If necessary to return Products to Manufacturer's factory, Products must be shipped by Purchaser with transportation charges prepaid by Purchaser.

Belshaw Adamatic Bakery Group reserves the right to make changes in design or add any improvement to its Products at any time without incurring any obligations to install the same on Products previously sold.

Possession, use or operation of Products sold hereunder for any other than their designed purpose, or use of Products which are in poor repair, modified, improperly operated, or neglected, is done at the Purchaser's risk. Belshaw Adamatic Bakery Group hereby disclaims any liability for these actions and shall not be liable for defects in or for any damages or loss to any property which is attributable to such actions.

Under no circumstances shall Belshaw Adamatic Bakery Group be liable for any indirect, special, incidental, or consequential damages arising out of, or from the use of its Products by Purchaser, its assignees, employees, agents or customers.

THIS LIMITED WARRANTY SHALL BE PURCHASER'S SOLE AND EXCLUSIVE REMEDY WITH RESPECT TO DEFECTIVE PRODUCTS.

Warranty Period
This Limited Warranty covers Products manufactured by Belshaw Adamatic Bakery Group and sold by Belshaw Adamatic Bakery Group or its authorized distributor ("Distributor") or authorized dealer ("Dealer"), and this Limited Warranty shall extend for a period of one (1) year from date of shipment to Purchaser, and to the original Purchaser only.

Limited Warranty
With respect to products not manufactured by Belshaw Adamatic Bakery Group, warranty coverage shall be limited to the warranty of the original manufacturer of the product, or the Belshaw Adamatic Bakery Group Limited Warranty, whichever is the lesser coverage period.

Replacement Products provided under the terms of this Limited Warranty are warranted for the remainder of the original warranty period applicable to the Product.

Exclusions
This Limited Warranty excludes from its coverage and does not apply to: (a) solenoid and relay coils; (b) lamps; (c) "O" rings; (d) belts; and (e) impellers. This Limited Warranty also excludes the cost of labor for removing and replacing Products subject to a warranty claim, other than the labor incurred directly by the Manufacturer when, in Belshaw Adamatic Bakery Group's opinion, a repair of the Product by the Manufacturer is justified.

Warranty Claims
In case of warranty claims relating to your Product, you must follow the instructions below.

Report Claims to Your Authorized Distributor or Dealer or to Belshaw Adamatic Bakery Group
As soon as you discover a problem, contact the Distributor or Dealer from whom you purchased the Product or Belshaw Adamatic Bakery Group. Your Distributor or Dealer will notify Belshaw Adamatic Bakery Group for you. **Only Belshaw Adamatic Customer Service can approve or authorize warranty claims.**

You must state the following:

1. Your name, company name, and telephone number
2. The location, phone number, and contact name where the Product is located
3. The invoice number and date of purchase of the Product
4. The Model and Serial Number of the Product, as written on the data tag attached to the Product
5. A description of the problem and how it occurred

Shipping Damage and Missing Items

Damage to the Packaging or Crate. On delivery, promptly check all packages thoroughly for any sign of damage. In cases of visible damage, **always note the damage on the Delivery Receipt.** Failure to note damage is taken by the Freight Carrier to mean that the package is in good condition at time of receipt, and can result in denial of a Freight Claim. Take photographs that clearly show the damage.

Damage to Products. If you find any damaged Product inside the shipment, photograph the damage both inside and outside of the package. Do not throw the packaging away. Photos of the package and contents are needed to show the condition of the Product at the time it was received.

Missing Items. As soon as you believe any items to be missing from a shipment, promptly report this to the Distributor or Dealer from whom the Product was purchased or to Belshaw Adamatic Bakery Group. If possible, photograph the entire contents of the delivery and email this to your Distributor or Dealer, or to Belshaw Adamatic Customer Service at service@belshaw.com.

Returning Products to Belshaw Adamatic Bakery Group
Under the terms of the Limited Warranty, you may be asked to return to Belshaw Adamatic Bakery Group any Product that is the subject of a warranty claim. These Products must be clearly labeled with a Return Goods Authorization Number ("RGA Number") given to you by your Distributor or Dealer, or by Belshaw Adamatic Customer Service. Products received without an RGA Number will not be processed. All Products must be shipped freight prepaid by the Purchaser to Belshaw Adamatic Bakery Group at the address below.

Contacting Belshaw Adamatic Bakery Group
At any time, you can contact Belshaw Adamatic Bakery Group customer service for assistance:

Belshaw Adamatic Bakery Group Customer Service
814 44th St. NW, Suite 103,
Auburn WA 98001, USA
Phone: 800-578-2547 (USA/ Canada) or (+1)206-322-5474 (Worldwide)
Email: service@belshaw.com
Office Hours: Monday – Friday, 6am to 4pm, USA Pacific Time

Belshaw®

www.belshaw.com

814 44th Street NW, Suite 103
Auburn, WA 98001 USA

1-800-BELSHAW
1-800-578-2547 (USA/Canada)
(+1) 206-322-5474 (Worldwide)

service@belshaw.com

an Ali Group Company

GROUP

The Spirit of Excellence